REV	DESCRIPTION	MARK
X1	first edition	

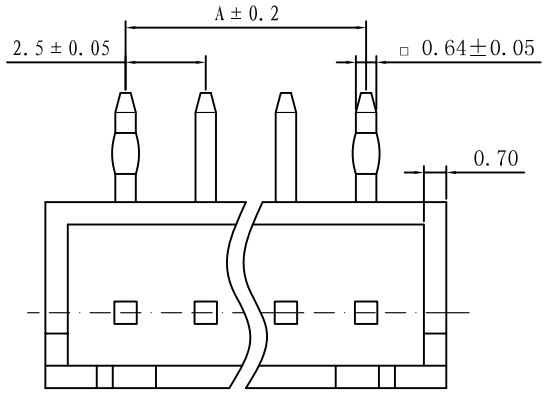

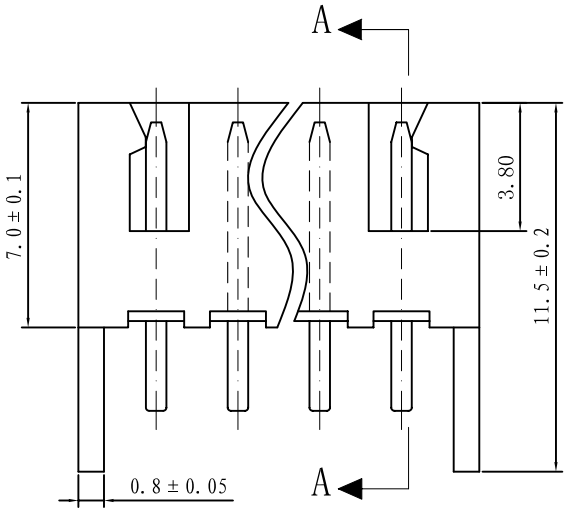

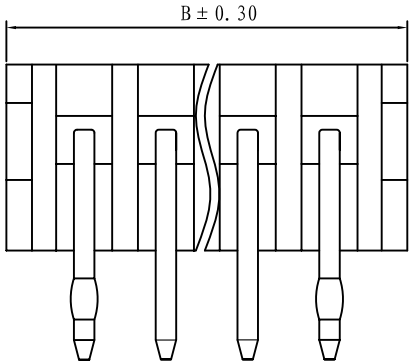

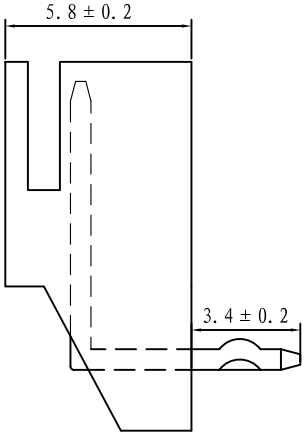

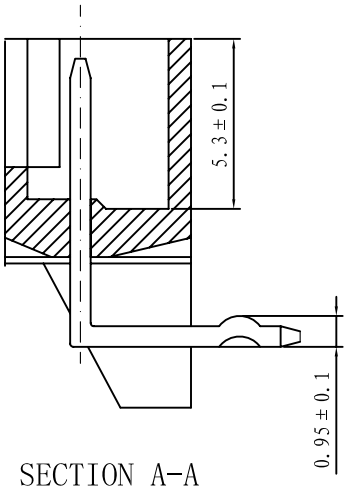

SECTION A-A

SPECIFICATIONS

- Voltage rating: 250V AC, DC
- Current rating: 3A, AC, DC
- Withstanding Voltage: 1000V AC/minute
- Insulation resistance: 1000MΩmin
- Temperature range: -25°C - +85°C
  (including temperature rise in applying electrical current)
- Contact resistance: 30mΩ max

WAFER

- Poles: 2-16
- Material: Nylon 66, UL94V-0
  Brass Tin-plating
- Q'TY: 1000 pcs/bag

PIN	DIMENSION (mm)	
	A	B
2	2.50	7.50
3	5.00	10.00
4	7.50	12.50
5	10.00	15.00
6	12.50	17.50
7	15.00	20.00
8	17.50	22.50
9	20.00	25.00
10	22.50	27.50
11	25.00	30.00
12	27.50	32.50
13	30.00	32.50
14	32.50	35.00
15	35.00	37.50
16	37.50	40.00

CCDX 深圳市诚得信电子有限公司 SHENZHEN CHENGDEXIN ELECTRONICS CO.,LTD				PART NO.: XH-nAWD		
X. ±	X.° ±	MAT'L	APPD:	CUS PART NO.:		
.X ± 0.20	.X° ± 0.1°					
.XX ± 0.10	.XX° ±0.05°	FINISH	CHKD:	DATE	VERSION VI.0	
.XXX ±	.XXX° ±					
	UNITS: mm	Q'TY	DR: 邓琴	SCALE 1:1	SHEET 1/1	REV. X1